Convex Mirror
by Ochre
Contemporary
United States

Gesso and burnished bole frame with convex glass mirror ordered individually or as a set of three.

20" Dia. x 3" D	16" Dia. x 3" D	12" Dia. x 3" D
PM-OC-CONVEX-19	PM-OC-CONVEX-15	PM-OC-CONVEX-11

CONVEX MIRROR

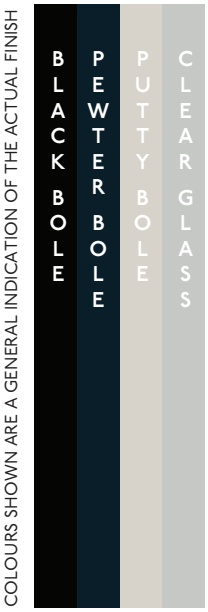

COLOURS SHOWN ARE A GENERAL INDICATION OF THE ACTUAL FINISH

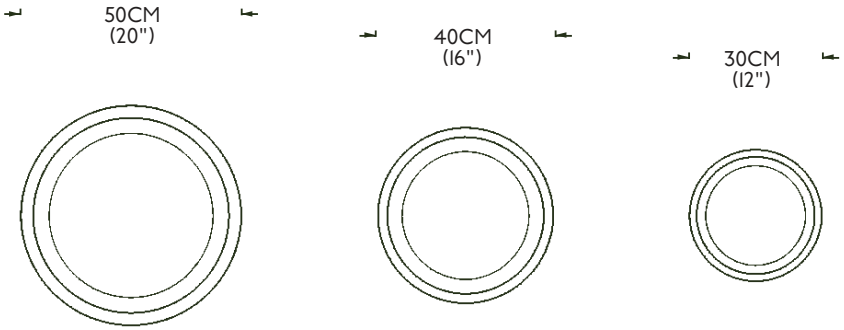

DIMENSIONS:	OVERALL - 50CM DIAM X 5.5CM D (20" DIAM X 3" D)
	40CM DIAM X 5.5CM D (16" DIAM X 3" D)
	30CM DIAM X 5.5CM D (12" DIAM X 3" D)
	FRAME - APPROX 7CM W X 5.5CM D (2¾" W X 3" D)
WEIGHT:	APPROX 3.5KG (8LBS), 2.5KG (6LBS), 1KG (3LBS)
LEAD TIME:	10 - 12 WEEKS
ALSO AVAILABLE:	OVERALL - 80CM DIAM X 10CM D (31" DIAM X 3" D)
WEIGHT:	APPROX 12KG (27LBS)
	WITH ANTIQUE GLASS ONLY
	OVERALL - 105CM DIAM X 12CM D (41" DIAM X 5" D)
WEIGHT:	APPROX 30KG (66LBS)
	WITH ANTIQUE GLASS ONLY

GESSO AND BOLE IS THE BASE USUALLY PREPARED FOR WATER GILDING; THE TECHNIQUE IS CENTURIES OLD • SIX TO EIGHT LAYERS OF GESSO, AND THEN THREE TO FOUR LAYERS OF BOLE (WHICH IS A MIXTURE OF NATURAL EARTH PIGMENTS AND GELATIN GLUE) ARE APPLIED WHILST WARM • EACH LAYER OF THE GESSO, AND EACH LAYER OF THE BOLE IS FINELY SANDED, AND THEN THE LAST LAYER OF BOLE IS BURNISHED

111 RHODE ISLAND STREET, SUITE 1
SAN FRANCISCO, CA 94103

WWW.COUPDETATSF.COM
INFO@COUPDETATSF.COM
415-241-9300