The Petra Coffee Table features an oval marble table top and four solid bronze legs, sand-cast from hand-formed molds. The bulbous, sculptural legs are inspired by the strong and elegant hind legs of a camel.

INFO@COUPDETATSF.COM
COUPDETATSF.COM

Petra Coffee Table - Oval

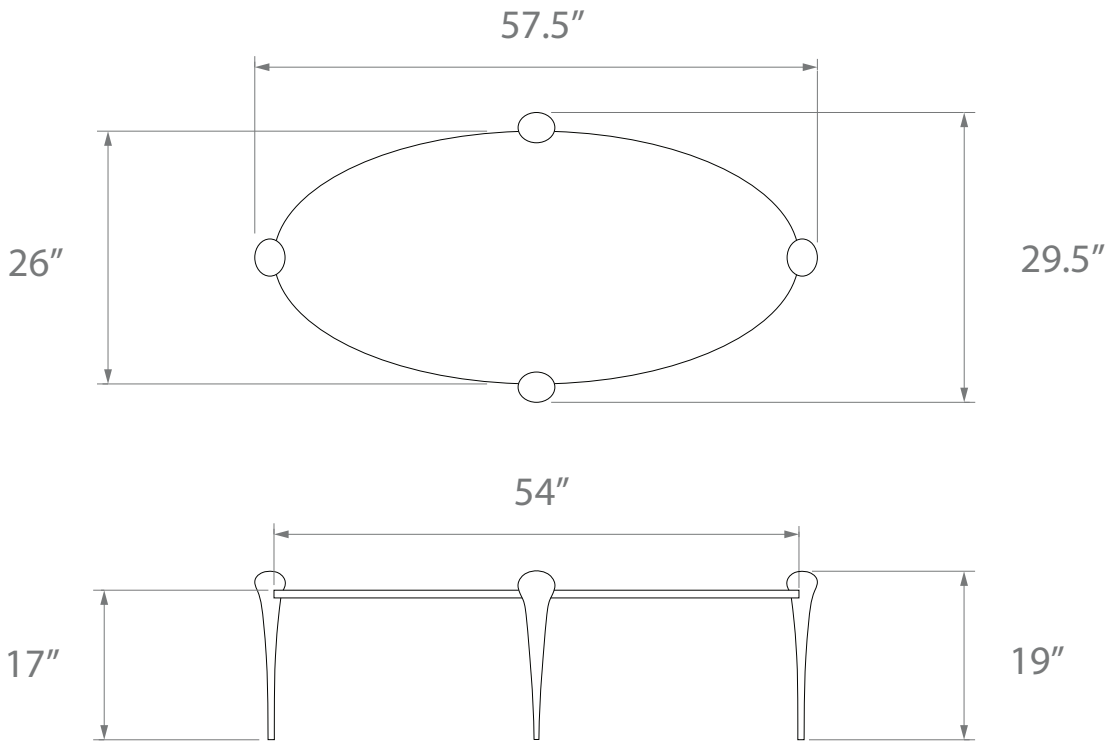

Dimensions
overall: 57.5″L x 29.5″W x 19″H
marble top: 54″L x 26″W x 17″H
custom marble dimensions available

Materials
marble and *polished bronze
**polished bronze is left unlacquered as a live finish, in order to allow a rich, natural patina to develop over time.*

Marble
nero marquina, dark emperador, crema siva, sahara noir, patagonia, calacatta viola, giallo siena or statuary
inquire for custom marble/stone

Lead time
12-16 weeks

The Petra table legs are made with the age old technique of sand-casting, which can produce pitting and surface variations in the metal. These features are inherent to the casting process and highlight the unique and hand-made nature of each piece.

INFO@COUPDETATSF.COM
COUPDETATSF.COM

konekt

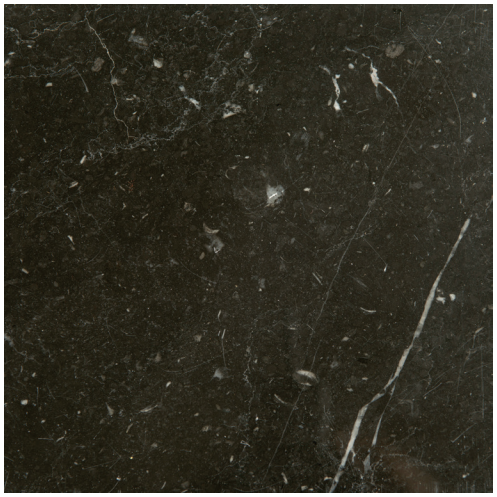

Nero Marquina

Sahara Noir

Dark Emperador

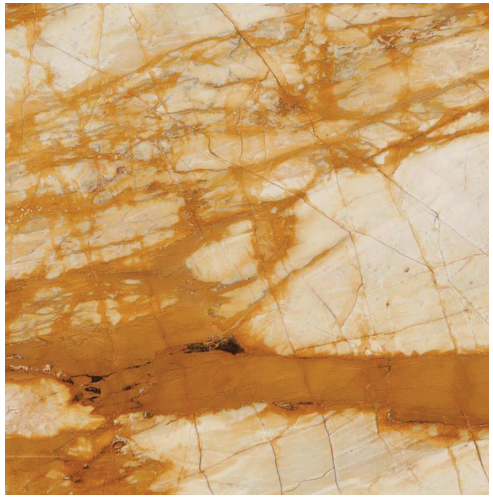

Giallo Siena

Statuary

Crema Marfil

Patagonia

Calacatta Viola

INFO@COUPDETATSF.COM
COUPDETATSF.COM

konekt

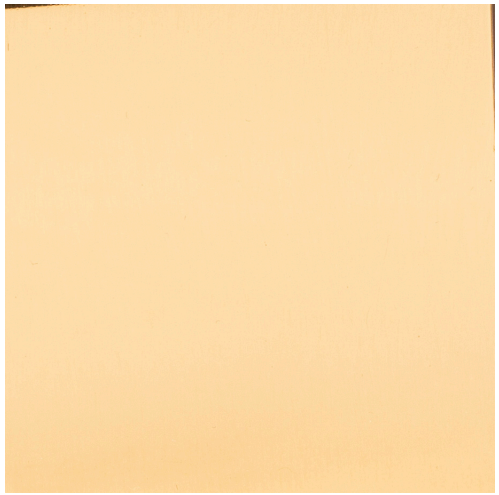

Polished Bronze

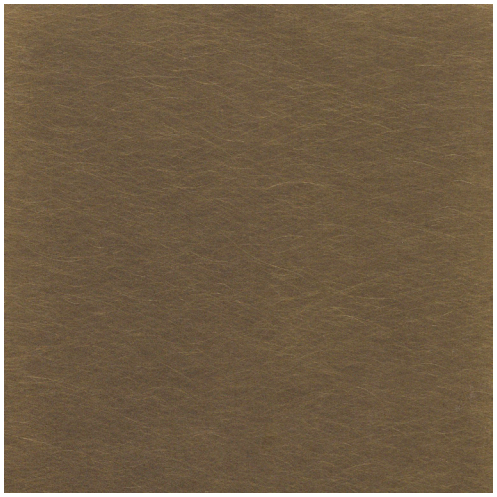

Antique Brass

Oil-Rubbed Bronze

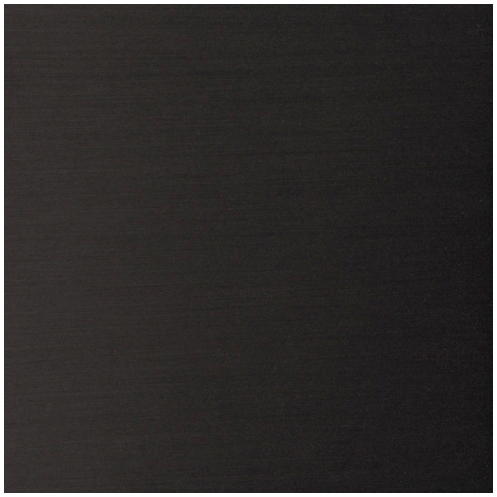

Satin Black

Satin Nickel

Antique Nickel

Polished Nickel

INFO@COUPDETATSF.COM
COUPDETATSF.COM

konekt