OCHRE

INFO@COUPDETATSF.COM

COUPDETATSF.COM

colours shown are a general indication of the actual finish

fumed lime waxed oak

silver patinated bronze

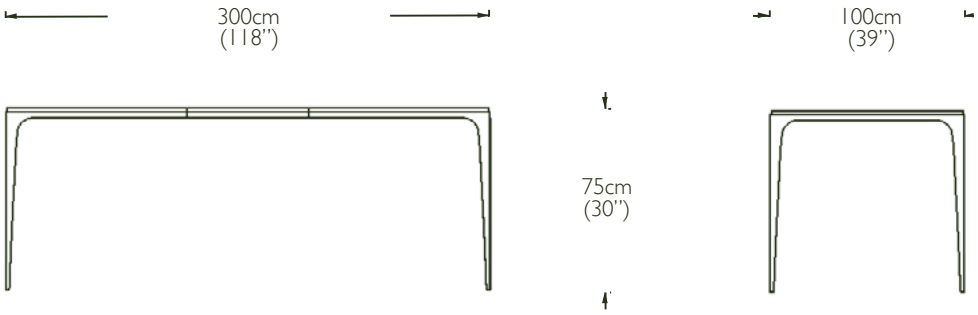

dimensions:	300cm w x 100cm d x 75cm h (this size available in EU/UK only)
weight:	approx 100kg (220lbs)
also available:	250cm w x 80cm d x 75cm h (96" w x 31" d x 30" h)
weight:	approx 74kg (185lbs)
	181cm w x 71cm d x 75cm h (72" w x 28" d x 30" h)
weight:	approx 50kg (120lbs)
	custom sizes available - please enquire

kiln dried oak is used for the table top however, it is still natural for the wood to move - contract or expand - in response to environmental conditions and, as such, some shrinkage may be noticeable on the wood top • placemats and coasters should be used at all times to protect the surface

whippet table rectangular

cast bronze table base in silver patinated finish with bronze tips and top in fumed limed oak